MIX FORCE
AGITATORS & MIXERS

2HP, 3HP and 5HP

MOBILE AND FIXED COLUMN AGITATOR

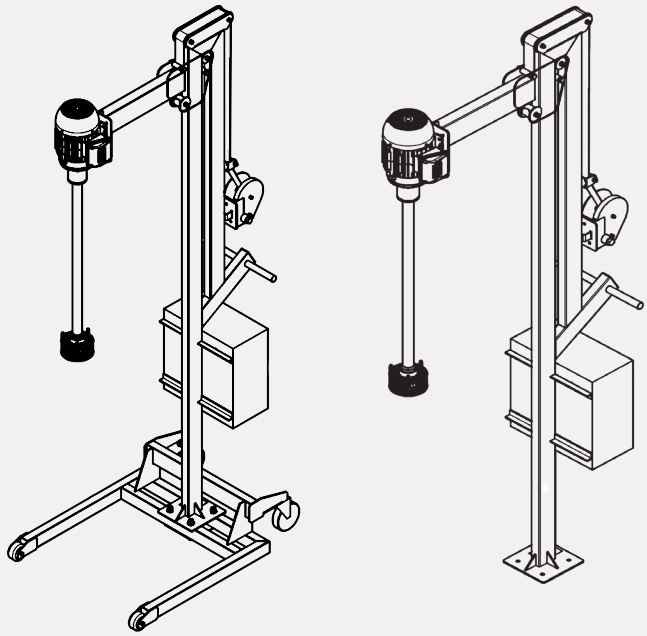

QUICK GUIDE

Mobile / Fixed Column Agitator

SUMMARY

1. MOBILE / FIXED COLUMN AGITATOR

1.1. Introduction

1.2. Included items

2. TECHNICAL SPECIFICATIONS

3. INSTALLATION OF THE MOBILE / FIXED COLUMN AGITATOR

3.1. Introduction

3.2. Getting to Know the Equipment Parts

3.3. Installing the Agitator (Fixed or Mobile Version)

3.4. Mounting the Motor on the Movable Arm

4. ELECTRICAL INSTALLATION

5. MAINTENANCE

5.1. Components

6. WARRANTY TERMS

6.1. The warranty will be valid provided that?

6.2. In Which Cases Is the Warranty Claim Denied?

1. MOBILE / FIXED COLUMN AGITATOR

1.1. INTRODUCTION

Congratulations! You have just acquired a product of high quality and advanced technology. Mixforce Agitators are designed to deliver efficient and safe performance, meeting a wide range of industrial needs.

To ensure proper installation and the best performance of your **Mobile / Fixed Column Industrial Agitator**, we recommend reading this guide carefully. If you have any questions, please contact our Customer Service Channel.

This equipment is recommended for mixing, homogenizing, and dispersing processes in tanks and containers of up to **1000 L (IBCs, carboy, stainless steel tanks, etc.)**. Make sure to follow all instructions for safe and efficient use.

WARNING

Failure to check and size the system in advance may result in the product not functioning correctly.

1.2. INCLUDED ITEMS

- 1- Electric motor: 2 HP, 3 HP or 5 HP;
- 2- Stainless steel shaft: AISI 304;
- 3- Cowles impeller + High-Efficiency impeller;
- 4- Column structure (mobile or fixed, as specified);
- 5- Electrical panel with frequency inverter;
- 6- Power cable with standard industrial plug.

2. TECHNICAL SPECIFICATIONS

The table below shows the technical specifications:

Features	Specifications
Model	Industrial Agitator – Mobile / Fixed Column
Motor Power	According to model (2 HP, 3 HP or 5 HP)
Rotation	1750 rpm (adjustable via frequency inverter)
Movable Winch	Capacity up to 75kg
Application	Mixing and homogenizing liquids in volumes up to 1000 L
Impeller Type	1 Cowles impeller + 1 high-efficiency impeller
Impeller Material	Stainless steel AISI 304
Mounting	Fixed or mobile
Voltage	220v, 380v and 440v

3. INSTALLATION OF THE MOBILE / FIXED COLUMN AGITATOR

3.1. INTRODUCTION

Below, we describe the correct procedure for installing the **Mobile/Fixed Column Industrial Agitator.**

3.2. GETTING TO KNOW THE EQUIPMENT PARTS

1 - Support Column: Vertical structure responsible for supporting the agitator;
2- Motorization: Electric motor available in 2 HP, 3 HP, or 5 HP power options;
3- Mobile Base: Lower structure equipped with casters to allow easy movement of the equipment;
4- Movable Arm: Mobile structure responsible for vertically moving the motor.

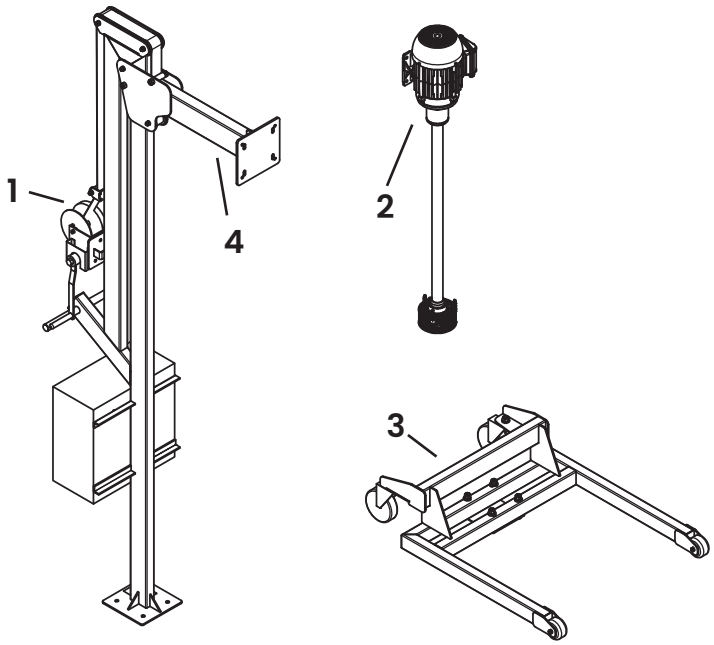

3.3. INSTALLING THE AGITATOR (FIXED OR MOBILE VERSION)

1- Decide whether to use the **fixed or mobile version** of the agitator;
2- For **fixed** installation:
- Position the column at its final operating location;
- Use the base holes to secure it firmly to the installation surface.

3- For **mobile** installation:
- Place the agitator on a flat, stable surface where the initial assembly and future movements will occur.

4- Proceed with motor installation.

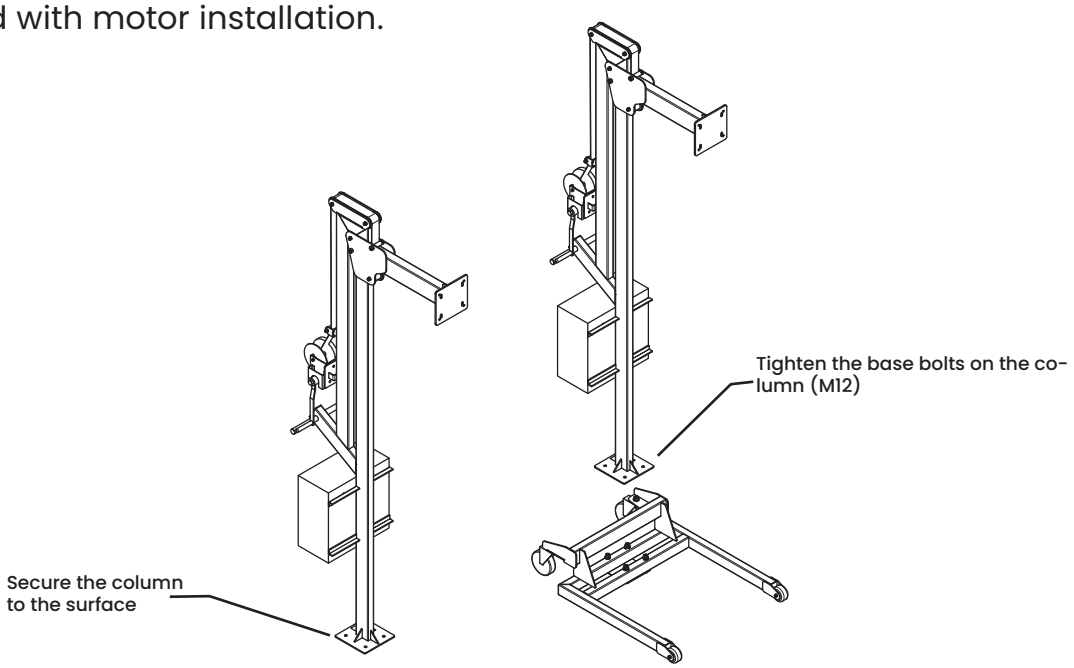

Fixed Version **Mobile Version**

3.4. MOTOR MOUNTING ON THE MOVABLE ARM

1- Align the motor with the movable arm, ensuring the correct fit.
2- Use the 4 bolts to firmly fasten the motor to the movable arm, ensuring full stability.

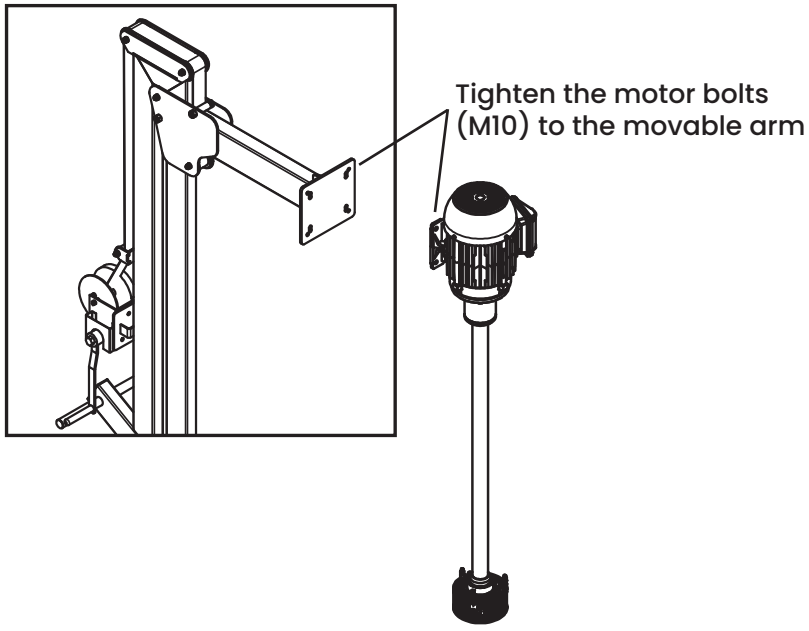

4. ELECTRICAL INSTALLATION

1- Check the electrical voltage at the installation site (220V, 380V, or 440V) to ensure compatibility and proper operation of the equipment;
2- Use an industrial plug/socket suitable for the equipment voltage to ensure a safe and durable connection.

BLUE PLUG		
Motor	**Plug**	**Power Supply**
2CV	16A	220v
3CV	16A	220v
5CV	16A	220v

RED PLUG		
Motor	**Plug**	**Power Supply**
2CV	16A	380v or 440v
3CV	16A	380v or 440v
5CV	16A	380v or 440v

WARNING

Proper grounding is essential to ensure operator safety.

5. MAINTENANCE

To ensure the durability and efficiency of your IBC agitator, it is essential to perform regular preventive maintenance. In addition to inspecting the main components of the agitator, it is recommended to periodically review the electric motor and the reducer. Consult the catalog for each component to follow the specific maintenance guidelines and ensure safe and efficient operation of the system.

5.1. COMPONENTS

- Complete Industrial Agitator with Fixed or Mobile Column
- Electric motor (check specific catalog)
- Electrical panel with frequency inverter and speed control
- All necessary accessories for installation and operation

Access the Mixforce Manuals Center to download the file corresponding to your equipment.

Or visit: www.mixforce.com.br/manuais

6. WARRANTY TERMS

MIXFORCE guarantees the performance of its equipment, provided that it is used in accordance with the technical limitations of the product and the conditions informed by the customer during the sale. The warranty covers the period of 12 months after the issuance of the sales invoice.

WARNING

The warranty covers exclusively manufacturing defects, provided that they are duly proven by authorized MIXFORCE technicians. The product must be returned to MIXFORCE without having been disassembled or modified.

1. **The warranty will be valid provided that:**
   - Transportation, handling and storage must be carried out appropriately;
   - Installation must strictly follow the technical specifications, without exposing the equipment to aggressive agents;
   - The equipment must be operated within the recommended usage limits;
   - Preventive maintenance must be performed periodically, as indicated in the manual or data book;
   - Repairs and modifications must be carried out exclusively by professionals authorized by MIXFORCE;
   - Any defects must be reported immediately by the buyer and proven to be manufacturing faults.

2. **The warranty does not cover:**
   - Natural wear and tear resulting from the proper use of the equipment;
   - Incorrect installation or installation not in accordance with the technical instructions;
   - Damage caused by electrical variations or overloads, atmospheric discharges or natural agents;
   - Costs related to shipping and returning the equipment to the factory;
   - Disassembly and reassembly services performed at the buyer's location;
   - Expenses for travel, accommodation and meals for the technical team when the service is performed at the buyer's premises;
   - Damage to components such as gaskets, bearings, retainers and mechanical seals, when resulting from inadequate installation or improper storage.

If the buyer makes any modification or repair to the equipment without due authorization from MIXFORCE, the warranty will be automatically invalidated.

Repair or replacement of parts during the warranty period does not imply, under any circumstances, an extension of the original coverage period.

For more information or to activate the warranty, contact MIXFORCE through the official service channels.



MIXFORCE INDUSTRIA E COMERCIO
DE EQUIPAMENTOS INDUSTRIAIS LTDA

Phone: +55 (16) 99794-3162 - Customer Service: +55 (16) 99794-3162
www.mixforce.com.br - vendas@mixforce.com.br

Estrada Municipal Vereador Ariovaldo
Mariano Gera Batatais - SP
CNPJ: 28.143.296/0001-19
BRAZILIAN MANUFACTURER

EDITION JUL - 2025