MIXFORCE
AGITATORS & MIXERS

5HP
3 IMPELLERS

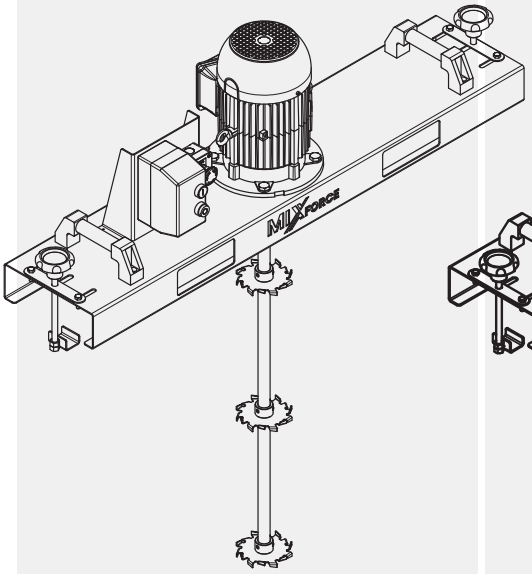

3HP
2 IMPELLERS

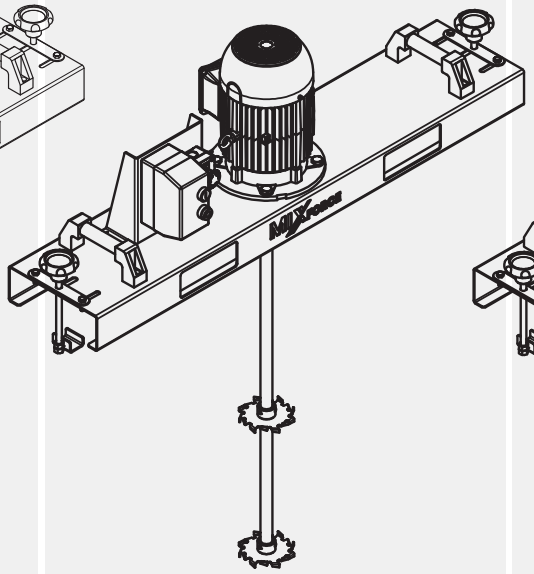

2HP
1 IMPELLERS

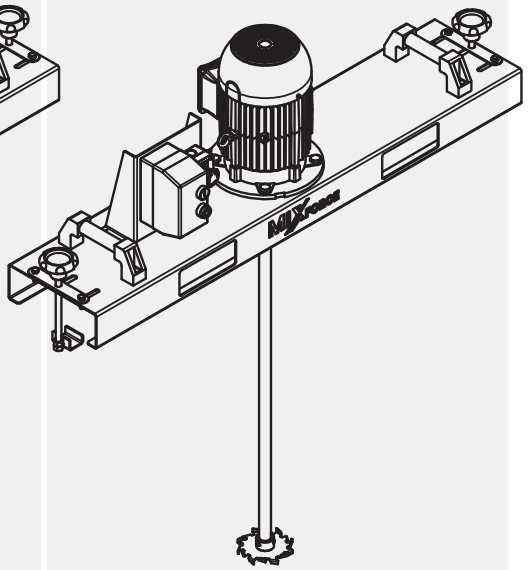

Quick Guide
IBC 1000L Direct Drive Agitator

SUMMARY

1. IBC 1000L DIRECT DRIVE AGITATOR

1.1. Introduction

1.2. Items included

2. Technical Specifications

3. Installation of the IBC 1000L DIRECT DRIVE AGITATOR

3.1. Introduction

3.2. Installing the shaft on the agitator base

3.3. Impeller fixing

3.4. Fixing the base to the IBC

4. Electrical Installation

5. Maintenance

5.1. Components

6. Warranty Term

1. IBC 1000L DIRECT DRIVE AGITATOR

1.1. INTRODUCTION

Congratulations! You have just purchased a high-quality, high-tech product. **Mixforce Agitators** are engineered to deliver efficient and safe performance, meeting the most diverse industrial needs.

To ensure correct installation and the best performance of your **IBC 1000L Direct Drive Agitator**, we recommend reading this guide in full. If you have any questions, please contact our Customer Service Channel.

This equipment is indicated for mixing and homogenization processes in 1,000-liter IBC tanks. Be sure to follow all instructions for safe and efficient use.

IMPORTANT

Failure to check and size the system in advance may result in the product not functioning correctly.

1.2. ITEMS INCLUDED

- 1- An electric motor from the following options: 2HP, 3HP, 5HP;
- 2- Fixing base with side locks;
- 3- Start button with overload relay and emergency button;
- 4- 1 meter power cable and industrial standard plug;
- 5- Stainless steel shaft with 01 to 03 impellers (according to choice).

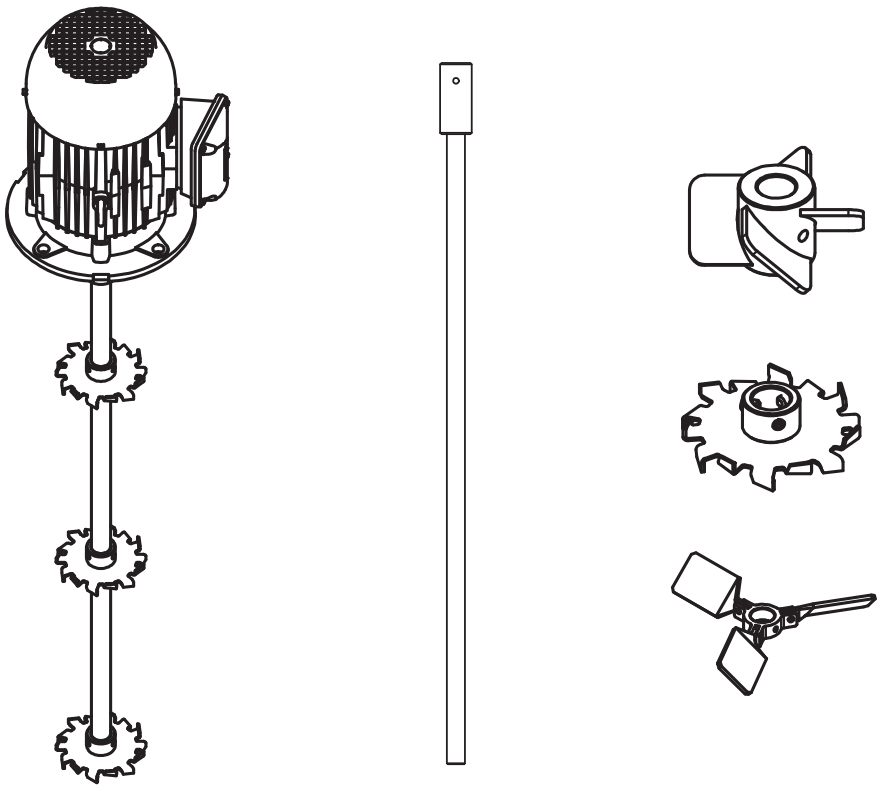

2. TECHNICAL SPECIFICATIONS

Features	Specifications
Model	IBC 1000L Direct Drive Agitator
Motor power	Depending on the model (2HP, 3HP or 5HP)
Rotation speed	1,750 RPM
Coupling type	Direct Drive
Application	Mixing and homogenization of liquids in 1,000L IBC containers
Impeller type	High efficiency impeller, Cowles or Pitch Blade
Impeller material	Stainless steel AISI 304
Mounting/Fixation	Clamps fixed to the support structure for IBC
Usage recommendations	Chemical, food, and cosmetic industries, among others.
Voltage	220V / 380V / 440V

3. INSTALLATION OF THE IBC 1000L DIRECT DRIVE AGITATOR

3.1. INTRODUCTION

Check the correct procedure for installing the **IBC 1000L Direct Drive Agitator.**

3.2. SHAFT INSTALLATION

1- Position the agitator base laterally to facilitate the installation of the shaft;
2- Insert the shaft into the motor;
3- Align the shaft hole with the motor hole;
4- Install the elastic pin to secure the shaft.

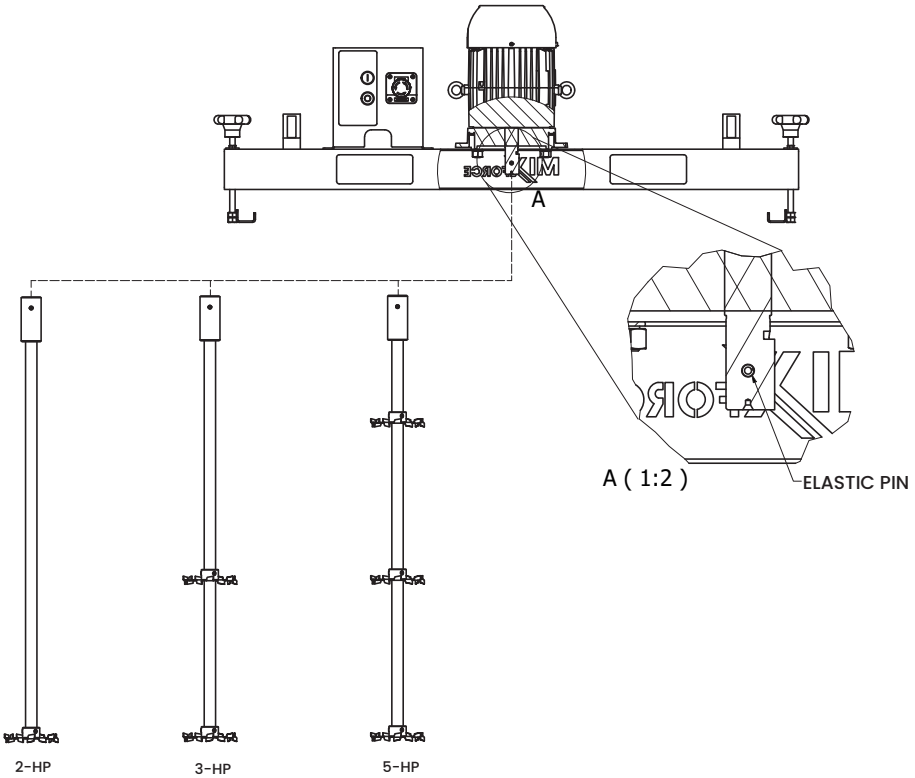

3.3. FIXING THE IMPELLERS

1- With the shaft installed on the base, position the impellers according to the marking on the shaft;
2- Tighten the impeller screws using an M6 Allen key;
3- After fixing, manually check that the impellers are firm and correctly positioned before turning on the equipment.

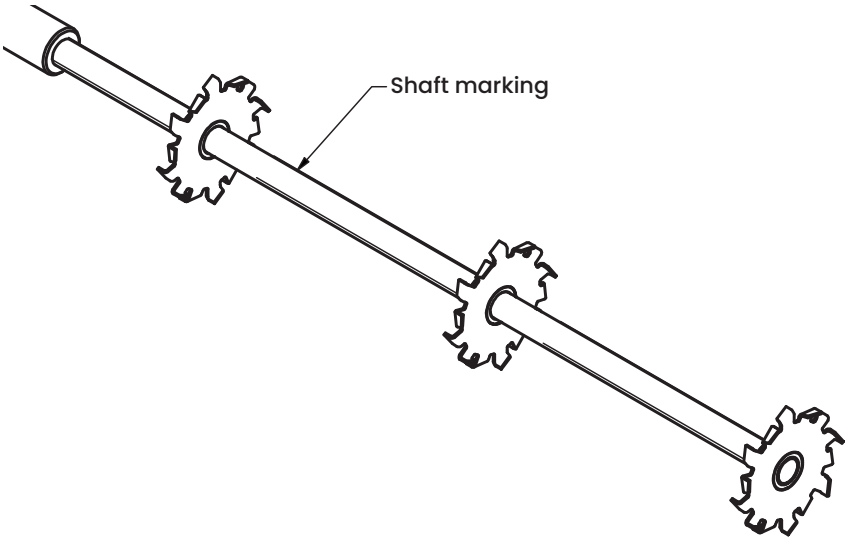

3.4. FIXING THE BASE ON THE IBC

1- Position the base on the IBC;
2- Secure the clamp to the IBC support structure.

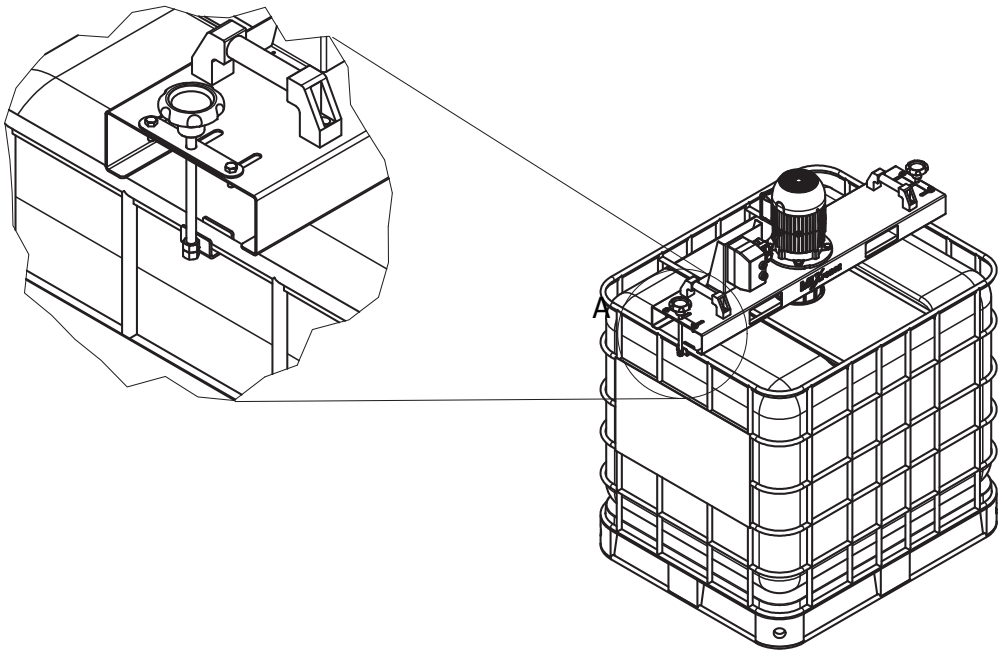

4. ELECTRICAL INSTALLATION

1- Check the electrical voltage at the installation site (220V, 380V, or 440V) to ensure compatibility and proper operation of the equipment;
2- Use an industrial plug/socket suitable for the equipment voltage to ensure a safe and durable connection.

BLUE PLUG		
Motor	**Plug**	**Power Supply**
2HP	16A	220v
3HP	16A	220v
5HP	32A	220v

RED PLUG		
Motor	**Plug**	**Power Supply**
2HP	16A	380v ou 440v
3HP	16A	380v ou 440v
5HP	16A	380v ou 440v

WARNING

Proper grounding is essential to ensure operator safety.

5. MAINTENANCE

To ensure the durability and efficiency of your IBC agitator, it is essential to perform regular preventive maintenance. In addition to inspecting the main components of the agitator, it is recommended to periodically review the electric motor and the reducer. Consult the catalog for each component to follow the specific maintenance guidelines and ensure safe and efficient operation of the system.

5.1. COMPONENTS

- IBC 1000L Agitator;
- Electric motor (check specific catalog);
- Reducer (check specific catalog);
- All accessories required for installation and operation.

Access the Mixforce Manuals Center to download the file corresponding to your equipment.

Or visit: www.mixforce.com.br/manuais

6. WARRANTY TERMS

MIXFORCE guarantees the performance of its equipment, provided that it is used in accordance with the technical limitations of the product and the conditions informed by the customer during the sale. The warranty covers the period of 12 months after the issuance of the sales invoice.

WARNING

The warranty covers exclusively manufacturing defects, provided that they are duly proven by authorized MIXFORCE technicians. The product must be returned to MIXFORCE without having been disassembled or modified.

1. **The warranty will be valid provided that:**
   - Transportation, handling and storage must be carried out appropriately;
   - Installation must strictly follow the technical specifications, without exposing the equipment to aggressive agents;
   - The equipment must be operated within the recommended usage limits;
   - Preventive maintenance must be performed periodically, as indicated in the manual or data book;
   - Repairs and modifications must be carried out exclusively by professionals authorized by MIXFORCE;
   - Any defects must be reported immediately by the buyer and proven to be manufacturing faults.

2. **The warranty does not cover:**
   - Natural wear and tear resulting from the proper use of the equipment;
   - Incorrect installation or installation not in accordance with the technical instructions;
   - Damage caused by electrical variations or overloads, atmospheric discharges or natural agents;
   - Costs related to shipping and returning the equipment to the factory;
   - Disassembly and reassembly services performed at the buyer's location;
   - Expenses for travel, accommodation and meals for the technical team when the service is performed at the buyer's premises;
   - Damage to components such as gaskets, bearings, retainers and mechanical seals, when resulting from inadequate installation or improper storage.

If the buyer makes any modification or repair to the equipment without due authorization from MIXFORCE, the warranty will be automatically invalidated.

Repair or replacement of parts during the warranty period does not imply, under any circumstances, an extension of the original coverage period.

For more information or to activate the warranty, contact MIXFORCE through the official service channels.

MIXFORCE INDUSTRIA E COMERCIO
DE EQUIPAMENTOS INDUSTRIAIS LTDA

Phone: +55 (16) 99794-3162 - Customer Service: +55 (16) 99794-3162
www.mixforce.com.br - vendas@mixforce.com.br

Estrada Municipal Vereador Ariovaldo
Mariano Gera Batatais - SP
CNPJ: 28.143.296/0001-19
BRAZILIAN MANUFACTURER

EDITION FEB - 2025

The images contained in this material are merely illustrative.