MIXFORCE
AGITATORS & MIXERS

1,5HP
RETRACTABLE UMBRELLA TYPE

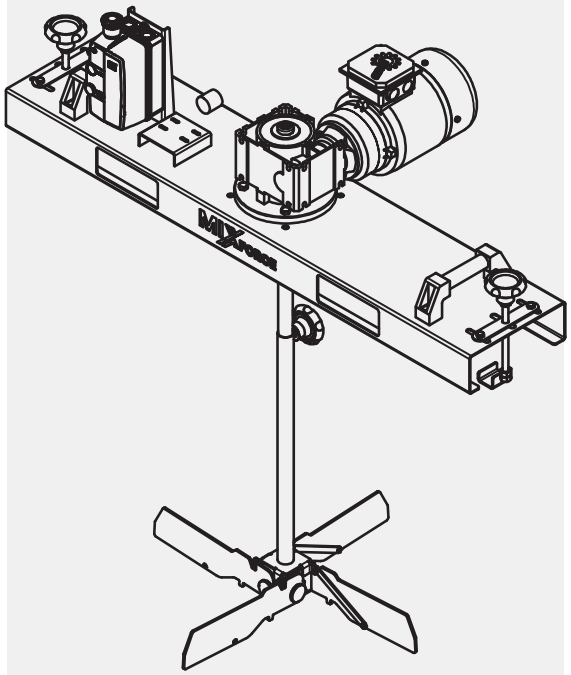

2HP
RETRACTABLE UMBRELLA TYPE

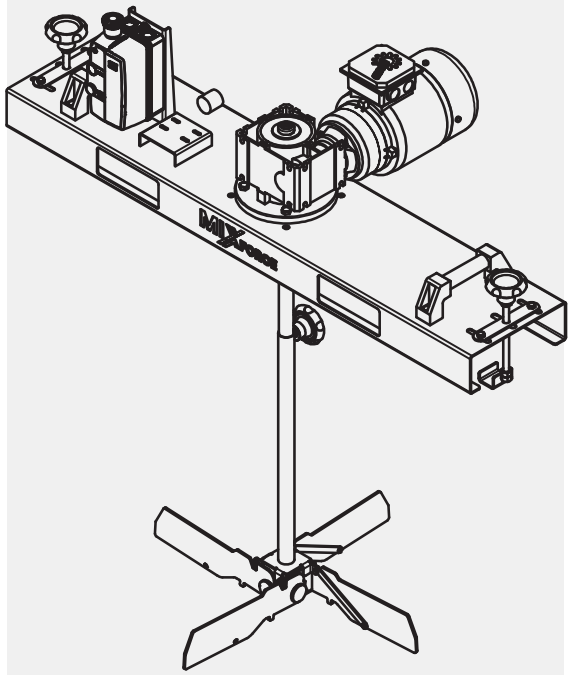

Quick Guide

GC Retractable Agitator

SUMMARY

1. IBC 1000L Retractable Agitator GC

1.1. Introduction

1.2. Items included

1.3. Items not included

2. Technical Specifications

3. Installing the IBC 1000L Retractable Agitator GC

3.1. Introduction

3.2. Shaft Installation in the IBC

3.3. Impeller Mounting

3.4. Fixing the base to the IBC

4. Electrical Installation

5. Maintenance

5.1. Components

6. Warranty Term

5.1. What are the timeframes for warranty service?

5.2. In which cases is the warranty voided?

1. IBC 1000L RETRACTABLE AGITATOR GC

1.1. INTRODUCTION

Congratulations! You have just purchased a high-quality, high-tech product. **Mixforce Agitators** are engineered to deliver efficient and safe performance, meeting the most diverse industrial needs.

To ensure correct installation and the best performance of your **IBC 1000L Retractable Agitator GC**, we recommend reading this guide in full. If you have any questions, please contact our Customer Service Channel.

This equipment is **intended for mixing and homogenization processes in 1,000-liter IBC containers**, featuring a retractable system that facilitates handling and adaptation to different applications. Be sure to follow all instructions for safe and efficient use.

IMPORTANT

Failure to check and size the system in advance may result in the product not functioning correctly.

1.2. ITEMS INCLUDED

- 1- Electric motor - Choose between: 1.5 HP or 2 HP;
- 2- Mounting base with side locks;
- 3- Start switch (ON/OFF) with emergency stop button;
- 4- Industrial standard plug;
- 5- GC-type retractable impeller with 4 stainless steel blades;
- 6- Assembly and operation manual;

1.3. ITEMS NOT INCLUDED / OPTIONAL ITEMS (AVAILABLE FOR PURCHASE)

- 1- Electrical extension cable;
- 2- Speed control panel (Variable Frequency Drive – VFD);
- 3- IBC support stand;
- 4- IBC 1,000L container (Reservoir)

2. TECHNICAL SPECIFICATIONS

The technical specifications are shown in the table below:

Feature	Description
Model	IBC 1000L Retractable Agitator GC
Motor Power	According to the model (1.5 HP, 2 HP)
Rotation Speed	1.5HP 68 RPM | 2HP 81 RPM
Coupling Type	Direct
Application	Mixing and homogenization of liquids in 1,000L IBC containers
Impeller Type	Retractable, GC model
Impeller Material	Stainless steel AISI 304
Mounting/Fixation	Retractable impeller, fixed to the shaft.
Voltage	220V, 380V and 440V

3. INSTALLING THE IBC 1000L RETRACTABLE AGITATOR GC

3.1. INTRODUCTION

The following outlines the proper installation procedure for the **IBC 1000L Retractable Agitator GC.**

3.2.SHAFT INSTALLATION

1- Tilt the IBC sideways to facilitate shaft installation;
2- Insert the shaft into the motor;
3- Place the bushing at the end of the shaft;
4- Secure the shaft with the M10 screw.

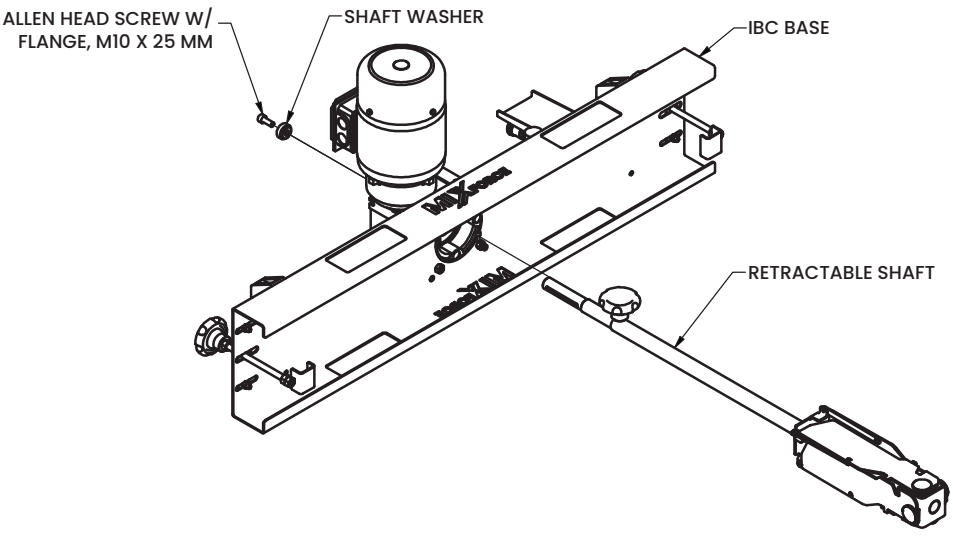

3.3. IMPELLER MOUNTING

1- With the shaft installed on the base, position the impellers according to the markings on the shaft;
2- **Figure 01** - Tighten the handle to secure the tube and the retractable impeller blades;
3- **Figure 02** - Loosen the handle to lower the tube and impeller blades to the working position.
4- **Figure 02** - Ensure the tube is fully lowered to the bottom limit to prevent damage to the equipment**.**

FIGURE 01

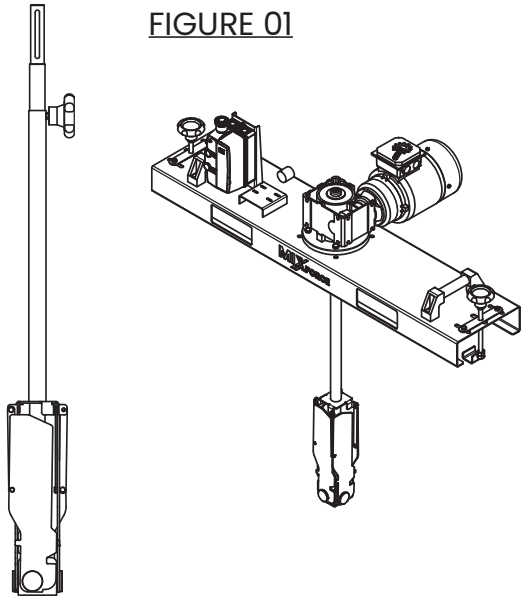

FIGURE 02

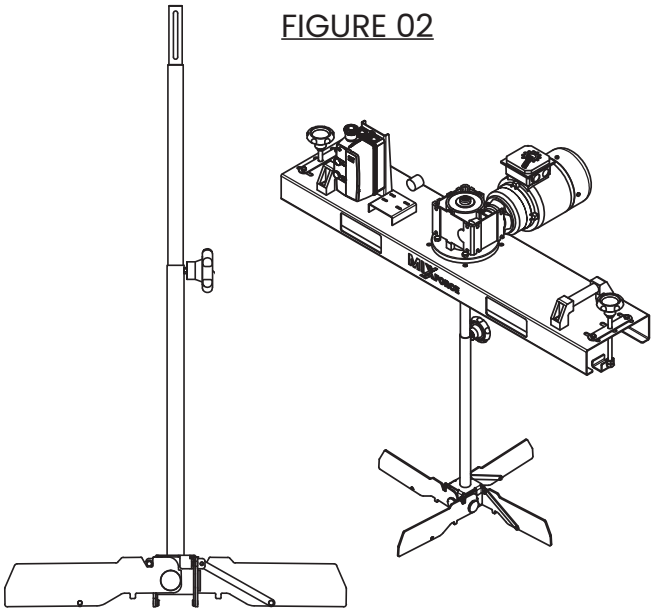

3.4. FIXING THE BASE IN THE IBC

1- Position the base on the IBC.
2- Secure the clamp to the IBC support structure.

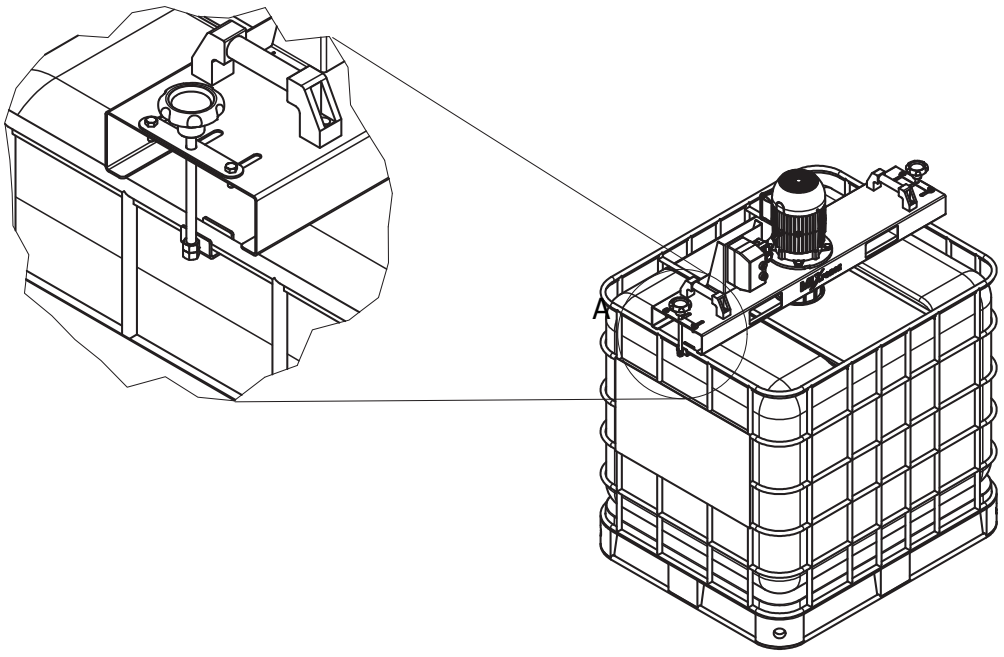

4. ELECTRICAL INSTALLATION

1- Verify the electrical voltage at the installation site (220V, 380V, or 440V) before installation to ensure proper equipment operation.
2- Use an industrial-grade socket appropriate for the equipment voltage to ensure a safe and reliable connection.

BLUE PLUG		
Gearmotor	**Plug**	**Power Supply**
1.5HP	16A	220v
2HP	16A	220v

RED PLUG		
Gearmotor	**Plug**	**Power Supply**
1.5HP	16A	380v ou 440v
2HP	16A	380v ou 440v

WARNING

Connection to the grounding system is essential to ensure operator safety.

5. MAINTENANCE

To ensure the durability and efficiency of your IBC agitator, it is essential to perform regular preventive maintenance. In addition to inspecting the agitator's main components, periodic servicing of the electric motor and gearbox is recommended. Refer to each component's catalog for specific maintenance guidelines to ensure safe and efficient system operation.

5.1. COMPONENTS

- IBC 1000L Retractable Agitator GC;
- Electric motor (see specific catalog);
- Gearbox (see specific catalog)
- All accessories required for installation and operation.

Access the Mixforce Manuals Center to download the file corresponding to your equipment.

Or visit: www.mixforce.com.br/manuais

6. WARRANTY TERM

MIXFORCE guarantees the performance of its equipment, provided that it is used in accordance with the technical limitations of the product and the conditions informed by the customer during the sale. The warranty covers the period of 12 months after the issuance of the sales invoice.

WARNING

The warranty covers exclusively manufacturing defects, provided that they are duly proven by authorized MIXFORCE technicians. The product must be returned to MIXFORCE without having been disassembled or modified.

1. **The warranty will be valid provided that:**
   - Transportation, handling and storage must be carried out appropriately;
   - Installation must strictly follow the technical specifications, without exposing the equipment to aggressive agents;
   - The equipment must be operated within the recommended usage limits;
   - Preventive maintenance must be performed periodically, as indicated in the manual or data book;
   - Repairs and modifications must be carried out exclusively by professionals authorized by MIXFORCE;
   - Any defects must be reported immediately by the buyer and proven to be manufacturing faults.

2. **The warranty does not cover:**
   - Natural wear and tear resulting from the proper use of the equipment;
   - Incorrect installation or installation not in accordance with the technical instructions;
   - Damage caused by electrical variations or overloads, atmospheric discharges or natural agents;
   - Costs related to shipping and returning the equipment to the factory;
   - Disassembly and reassembly services performed at the buyer's location;
   - Expenses for travel, accommodation and meals for the technical team when the service is performed at the buyer's premises;
   - Damage to components such as gaskets, bearings, retainers and mechanical seals, when resulting from inadequate installation or improper storage.

If the buyer makes any modification or repair to the equipment without due authorization from MIXFORCE, the warranty will be automatically invalidated.

Repair or replacement of parts during the warranty period does not imply, under any circumstances, an extension of the original coverage period.

For more information or to activate the warranty, contact MIXFORCE through the official service channels.

MIXFORCE INDUSTRIA E COMERCIO
DE EQUIPAMENTOS INDUSTRIAIS LTDA

Phone: +55 (16) 99794-3162 - Customer Service: +55 (16) 99794-3162
www.mixforce.com.br - vendas@mixforce.com.br

Estrada Municipal Vereador Ariovaldo
Mariano Gera Batatais - SP
CNPJ: 28.143.296/0001-19
BRAZILIAN MANUFACTURER

EDITION FEB - 2025

The images contained in this material are merely illustrative.