MIXFORCE
AGITATORS & MIXERS

25L, 50L and 100L

TYPE V SOLID MIXER

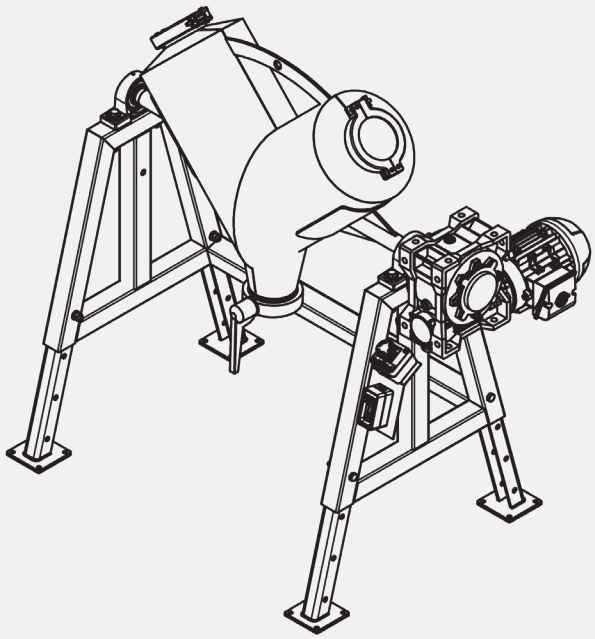

Quick Guide

V-TYPE Solid Mixer

SUMMARY

1. V-TYPE SOLID MIXER

1.1. Introduction

1.2. Items Included

2. Technical Specifications

3. Steps for First Use

3.1. Introduction

3.2. Getting to Know the Parts of the Equipment

3.3. Using The Equipment

3.4. Cleaning

4. Electrical Installation

5. Maintenance

5.1. Components

6. Warranty Terms

5.1. What Are the Timeframes for Warranty Service?

5.2. In Which Cases Is the Warranty Denied?

1. V-TYPE SOLID MIXER

1.1. INTRODUCTION

Congratulations! You have just acquired a high-quality, technologically advanced product. Mixforce Mixers are designed to deliver efficient and safe performance, meeting a wide range of industrial needs.

To ensure the correct installation and optimal performance of your **V-Type Solid Mixer,** we recommend reading this guide in full. If you have any questions, please contact our Customer Service Channel.

This equipment is designed to meet the demanding requirements of the pharmaceutical, food, and chemical industries, **providing high efficiency, productivity, and durability. It ensures excellent homogenization with deviations below 3%.** Make sure to follow all instructions for safe and efficient use.

IMPORTANT

Failure to check and properly size the system beforehand may result in the product not functioning correctly.

1.2. ITEMS INCLUDED

- MixForce V-Type Solid Mixer – 25L, 50L, or 100L;
- Control Push Button Panel;

2. TECHNICAL SPECIFICATIONS

On the below table you can check the technical specifications.

Feature	Description
Model	V-Type Solid Mixer
Motor Power	According to the model (2HP, 3HP, or 5HP)
Voltage	220V, 380V and 440V
Control System	Push Button Panel
Applications	Mixing powders and granules in the food, pharmaceutical, cosmetic, and chemical industries
Material	AISI 304 Stainless Steel

3. STEPS FOR FIRST USE

3.1. INTRODUCTION

Below we will describe the correct procedure for the first use of your **V-Type Mixer**.

3.2. GETTING TO KNOW THE PARTS OF THE EQUIPMENT

1. Opening Lid: Allows the addition of materials to be mixed. It must be properly closed before starting the equipment.
2. Discharge Valve: Facilitates the safe and practical discharge of the mixed material.
3. Control Push Button Panel: Provides three essential functions.
4. Electric Motor: Drives the mixing shaft, ensuring efficient movement of the materials.
5. Metal Frame: Robust support that keeps the equipment stable during operation.

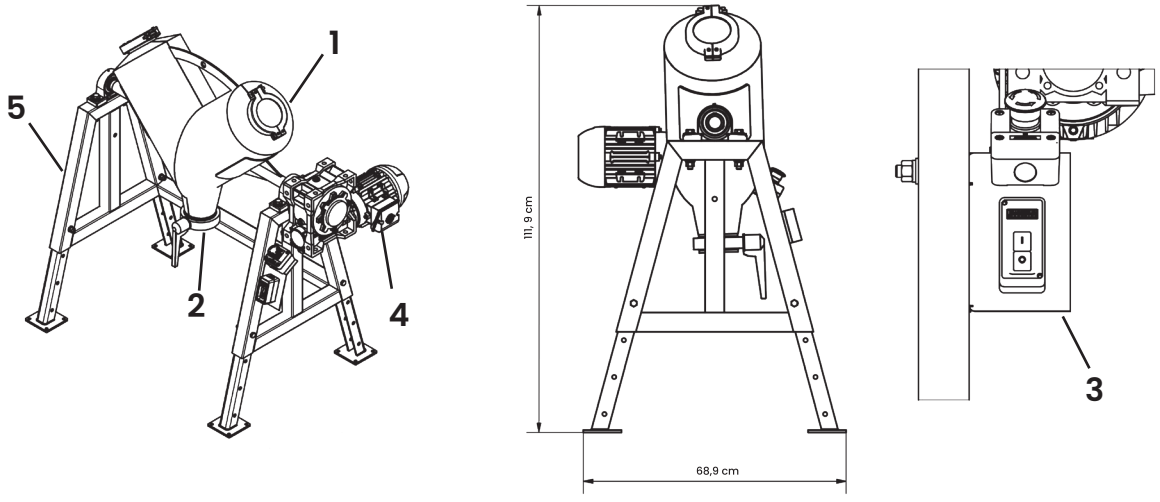

3.3. USING THE EQUIPMENT

To operate the mixer safely and efficiently, follow the steps below:

1. **Preparation**
- Check that the equipment is placed on a stable and level surface.
- Make sure there are no loose objects inside the tank.

2. Loading
- Open the mixer's top lid.
- Add the materials to be mixed, respecting the equipment's load limit.
- Close the lid securely.



3. Operation
- Press the START [I] button to begin operation.
- Monitor the process until the desired homogenization is reached.
- If a quick stop is needed, use the EMERGENCY button.

4. Shutdown
- Press the STOP [O] button to end operation.
- After the tank has come to a complete stop, open the lid and remove the mixed material.

3.4. CLEANING

Regular cleaning is essential to maintain the performance and durability of the mixer. Follow the steps below:

1. **Shutdown**:
- Ensure the equipment has stopped and disconnect it from the power source.

2. **Residue Removal:**
- Open the top lid and remove any remaining mixed materials:
- Use a soft brush and neutral detergent to clean the inside of the tank.
- Rinse with clean water and dry with a clean cloth.

3. **Electrical Panel Cleaning**
- Clean the panel with a dry, soft cloth. Avoid applying liquids directly to the panel.

4. **Preventive Maintenance:**
- Periodically check the condition of moving parts and the motor.
- Lubricate components according to the manufacturer's recommendations.

4. ELECTRICAL INSTALLATION

1- Check the compatibility of the local electrical voltage (220V, 380V, or 440V) before installation to ensure the correct operation of the equipment.
2- Use an appropriate industrial outlet for the equipment voltage, ensuring a safe and reliable connection.

BLUE SOCKET		
Motor	**Socket**	**Voltage**
2CV	16A	220v
3CV	16A	220v
5CV	16A	220v

RED SOCKET		
Motor	**Socket**	**Voltage**
2CV	16A	380v or 440v
3CV	16A	380v or 440v
5CV	16A	380v or 440v

WARNING

The connection to the grounding system is essential to ensure operator safety.

5. MAINTENANCE

To ensure the durability and efficiency of your V-Type Solid Mixer, it is essential to perform preventive maintenance regularly. In addition to inspecting the main components of the mixer, it is recommended to carry out periodic checks of the electric motor. Refer to the catalog of each component to follow the specific maintenance guidelines and ensure the system's safe and efficient operation.

5.1. COMPONENTS

- Complete MixForce V-Type Mixer;
- Electric Motor (refer to the specific catalog);
- Control Push Button Panel;
- All necessary accessories for installation and operation.

Access the Mixforce Manual Center to download the file corresponding to your equipment.

Or visit: www.mixforce.com.br/manuals

6. WARRANTY TERMS

MIXFORCE guarantees the performance of its equipment, provided it is used according to the product's technical limitations and the conditions specified by the customer at the time of sale. The warranty covers a period of 12 months from the date of the sales invoice.

WARNING

The warranty exclusively covers manufacturing defects, provided they are properly verified by authorized MIXFORCE technicians. The product must be returned to MIXFORCE without having been disassembled or modified.

1. **The warranty will be valid provided that:**
   - Transportation, handling and storage must be carried out appropriately;
   - Installation must strictly follow the technical specifications, without exposing the equipment to aggressive agents;
   - The equipment must be operated within the recommended usage limits;
   - Preventive maintenance must be performed periodically, as indicated in the manual or data book;
   - Repairs and modifications must be carried out exclusively by professionals authorized by MIXFORCE;
   - Any defects must be reported immediately by the buyer and proven to be manufacturing faults.

2. **The warranty does not cover:**
   - Natural wear and tear resulting from the proper use of the equipment;
   - Incorrect installation or installation not in accordance with the technical instructions;
   - Damage caused by electrical variations or overloads, atmospheric discharges or natural agents;
   - Costs related to shipping and returning the equipment to the factory;
   - Disassembly and reassembly services performed at the buyer's location;
   - Expenses for travel, accommodation and meals for the technical team when the service is performed at the buyer's premises;
   - Damage to components such as gaskets, bearings, retainers and mechanical seals, when resulting from inadequate installation or improper storage.

If the buyer makes any modification or repair to the equipment without due authorization from MIXFORCE, the warranty will be automatically invalidated.

Repair or replacement of parts during the warranty period does not imply, under any circumstances, an extension of the original coverage period.

For more information or to activate the warranty, contact MIXFORCE through the official service channels.

MIXFORCE INDUSTRIA E COMERCIO
DE EQUIPAMENTOS INDUSTRIAIS LTDA

Phone: +55 (16) 99794-3162 - Customer Service: +55 (16) 99794-3162
www.mixforce.com.br - vendas@mixforce.com.br

Estrada Municipal Vereador Ariovaldo
Mariano Gera Batatais - SP
CNPJ: 28.143.296/0001-19
BRAZILIAN MANUFACTURER

EDITION JUL - 2025

The images contained in this material are merely illustrative.